CAPACITY	SYMBOL/ SERIAL NO.	CIRCUIT DIAGRAM
AC100-240V, 50/60Hz		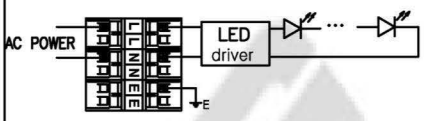
9W		

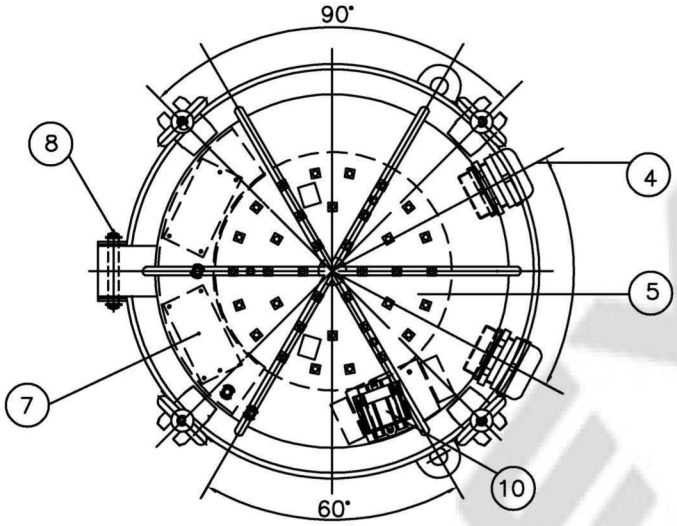

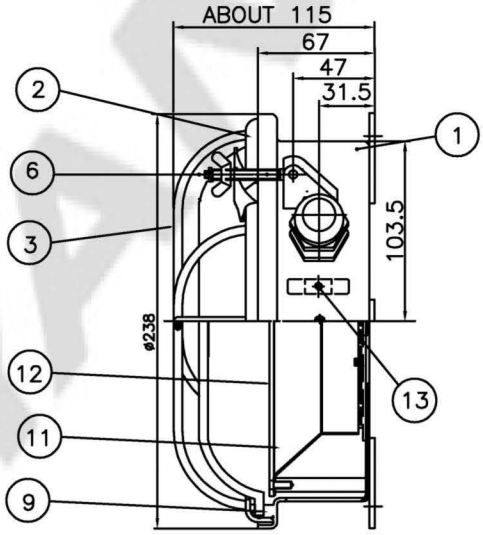

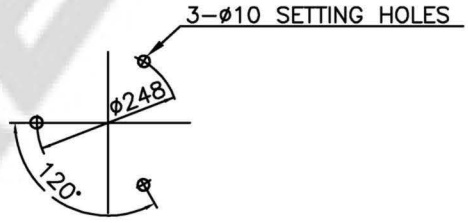

SETTING DIMENSION

NO	NAME OF PARTS	MATERIAL	Q'TY	REMARKS	NO	NAME OF PARTS	MATERIAL	Q'TY	REMARKS
13	OUTSIDE EARTH BOLT	STAINLESS STEEL304	1	M5					
12	DIFFUSION PLATE	POLYCAR-BONATE	1		6	BUTTERFLY NUT	STAINLESS STEEL304	4	M6
11	LED driver COVER	STAINLESS STEEL304	1		5	LED module	–	1	4,000±300K
10	TERMINAL BLOCK	–	1	CLAMPING 3P (2.5sq)	4	CABLE GLAND(R25M)	BRASS	2	ø9~ø17
9	PACKING	NEOPRENE	1		3	GUARD	STAINLESS STEEL304	1	
8	HINGE PIN	BRASS	1		2	FRAME	STAINLESS STEEL304	1	
7	LED driver	–	1		1	BODY	STAINLESS STEEL304	1	

APPROVED	B. K. KIM	UNIT	MM
CHECKED		SCALE	N/S
DRAWING	B. I. KIM	COLOR	N-9.3
DATE	2015.12.04	IP	56

TITLE;

LED DOME LIGHT

FOR MARINE USE

DAEYANG

MODEL NO.	LECD09-550UWCQC40(R25M)	WEIGHT	4.5 Kg
DWG NO.	LP4130023	SHEET NO.	37

[보안인증] 김병인 2019/10/15 09:43:47